PACKAGE OUTLINE DRAWING FOR 24L QFN (4x4mm)
MF-PO-D-0049 revision 0.0

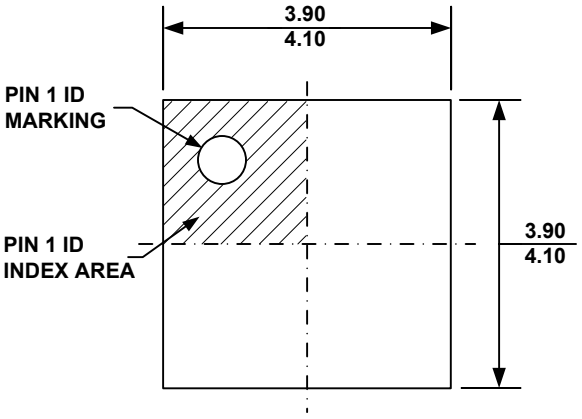

TOP VIEW

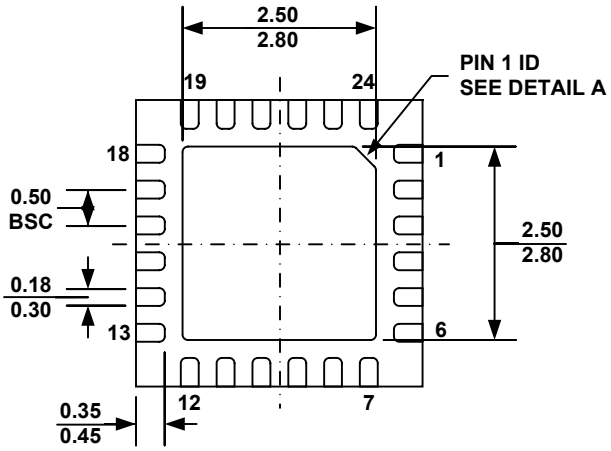

BOTTOM VIEW

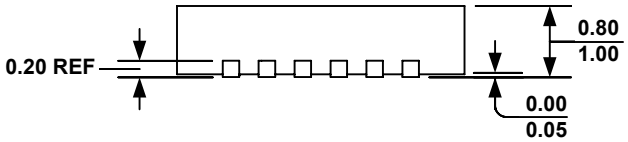

SIDE VIEW

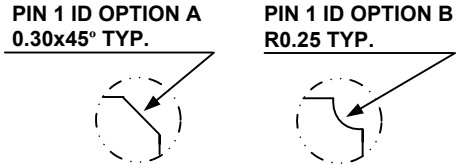

DETAIL A

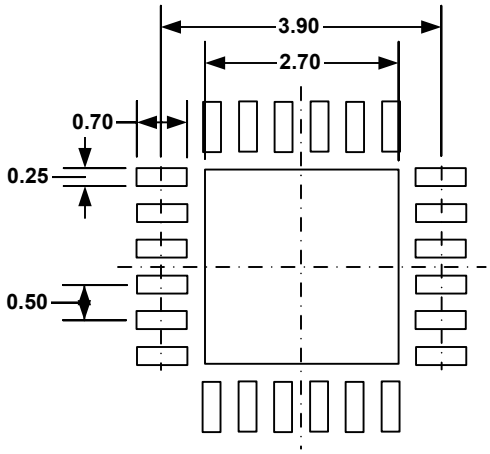

RECOMMENDED LAND PATTERN

NOTE:

1) ALL DIMENSIONS ARE IN MILLIMETERS.
2) EXPOSED PADDLE SIZE DOES NOT INCLUDE MOLD FLASH.
3) LEAD COPLANARITY SHALL BE 0.10 MILLIMETER MAX.
4) DRAWING CONFIRMS TO JEDEC MO-220, VARIATION VGGD.
5) DRAWING IS NOT TO SCALE.